LONG SEAMS	
COURSE	ORIENTATION
1 (TOP)	170°
2	180°

*VERT – TOP TO BOTTOM

Ship loose items:
NONE

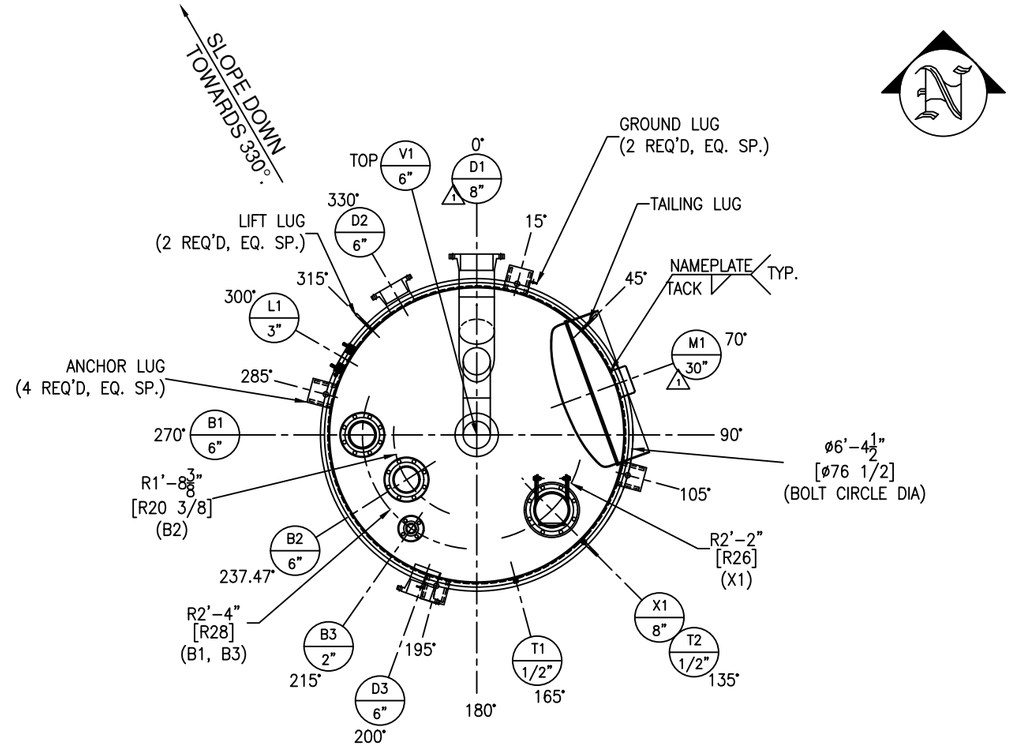

NOTE 7: SPOT X-RAY AS PER API 650 FOR M1 & M1 REPAD.

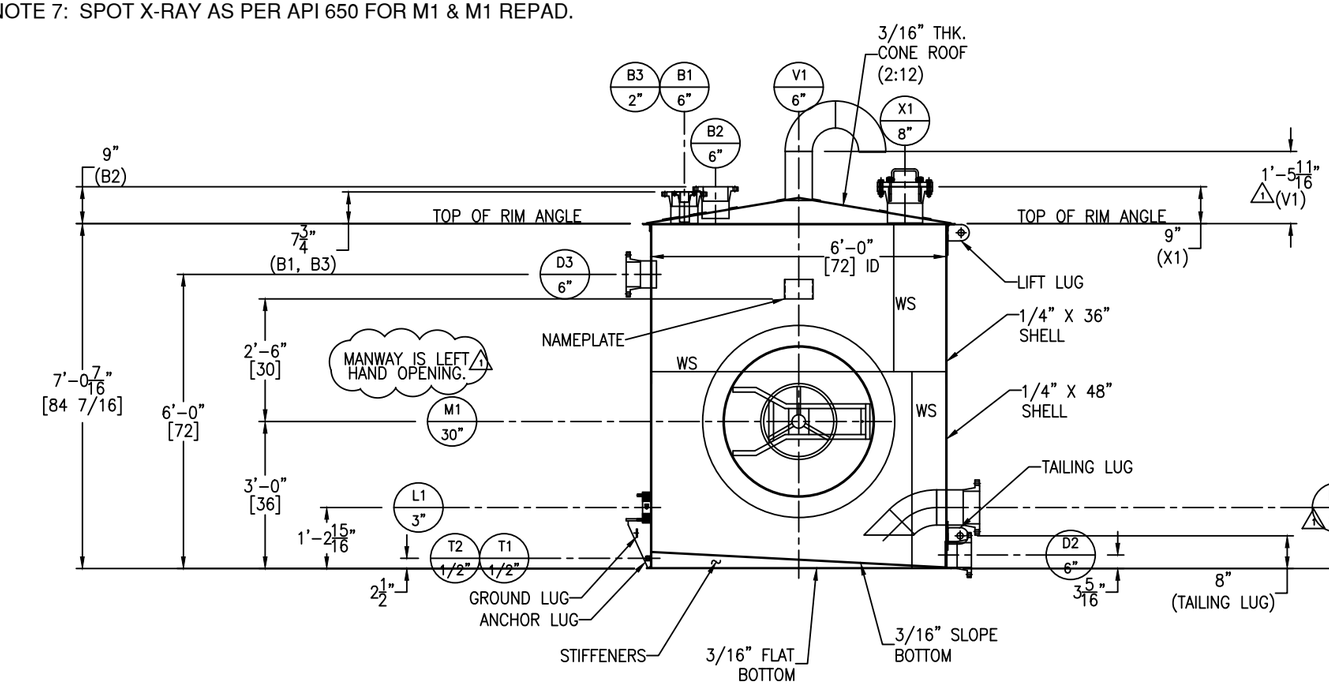

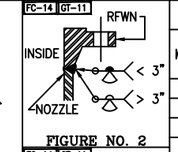

FIGURE NO. 2

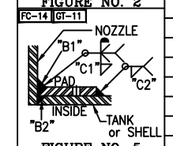

FIGURE NO. 5

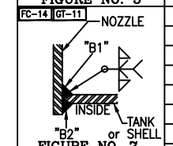

FIGURE NO. 7

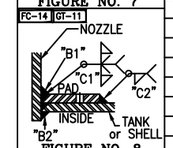

FIGURE NO. 8

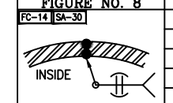

SHELL THK. < 5/16"

FIGURE NO. 9

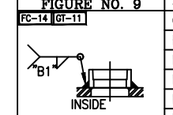

HALF CPLG TO SHELL
FIGURE NO. 12

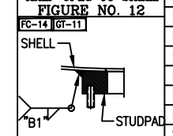

L1 TO SHELL
FIGURE NO. 13

NOZZLE SCHEDULE

MARK	SERVICE	SIZE	RATING	TYPE / STYLE	NECK SCHED.	PROJECTION EXT. (E)	PROJECTION INT. (MIN.)	WELD FIGURE	REPAD SIZE (WIDTH X THK.)	WELD SIZE "A1"	"A2"	"B1"	"B2"	"C1"	"C2"
B1	PROCESS INLET	6"	150#	RFWN	40S	SEE DWG	1"	2,8	2" X 3/16"	–	–	1/4	1/8	3/16	3/16
B2	PROCESS INLET	6"	150#	RFWN	40S	SEE DWG	1"	2,8	2" X 3/16"	–	–	1/4	1/8	1/4	1/4
B3	WATER SPRAY	2"	150#	RFWN	40S	SEE DWG	1"	2,8	2" X 3/16"	–	–	1/4	1/8	1/4	1/4
D1	PROCESS OUTLET	8"	150#	RFWN	40S	8"	SEE DWG	2,7	–	–	–	1/4	1/4	–	–
D2	DRAIN	6"	150#	RFWN	40S	6"	–	2,5	2" X 1/4" SEE DWG	–	–	1/4	1/8	1/4	1/4
D3	OVERFLOW	6"	150#	RFWN	40S	6"	1"	2,7	–	–	–	1/4	1/4	–	–
L1	LEVEL	3"	–	SP. STUDPAD	–	–	–	13	–	–	–	1/4	1/4	–	–
M1	MANWAY	30"	–	CM-2	1/4"	2"	SEE DWG	8	5" X 1/4"	–	–	1/4	1/4	1/4	1/4
V1	VENT	6"	–	PIPE W/ ELBOWS	40S	SEE DWG	–	5	2" X 3/16"	–	–	1/4	1/8	3/16	3/16
X1	INSPECTION HATCH	8"	150#	RFWN W/ BLIND	40S	SEE DWG	1"	2,8	2" X 3/16"	–	–	1/4	1/8	3/16	3/16
T1	TEST COUPLING	1/2"	3000#	HALF THRD CPLG W/ PLUG	–	–	–	12	–	–	–	1/4	1/8	–	–
T2	TEST COUPLING	1/2"	3000#	HALF THRD CPLG W/ PLUG	–	–	–	12	–	–	–	1/4	1/8	–	–

MATERIALS OF CONSTRUCTION

	VESSEL
SHELL	SA240-304/304L
CONE TOP/FLAT&SLOPE BTM	SA240-304/304L
RIM ANGLE	SA479-304/304L
NOZZLE NECKS	SA312-304/304L WLD & SA403-304/304L WPB
NOZZLE FLANGES	SA182F-304/304L
MANWAY NECKS	SS304
MANWAY FLANGES	SS304
MANWAY GASKETS	BUNA-N
NOZZLE GASKETS	GARLOCK 3000
BOLTS/STUDS (NOZZLE)	SA193-B8 (TEFLON COATED)
NUTS (NOZZLE)	SA194-8 (TEFLON COATED)
BOLTS/STUDS (STRUCTURE)	–
NUTS (STRUCTURE)	–
REPADS	SA240-304/304L
SUPPORTS/HOLD DOWNS	SA240-304/304L
LIFTING/TAILING LUGS	SA240-304/304L
COUPLING/PLUG	SA182F-304/304L
GROUND LUG	SA240-304/304L
STUD PAD	SA182F-304/304L OR SA240-304/304L
STIFFENERS	SA240-304/304L
HANDRAIL	–
HANDRAIL CLIPS	–
PLATFORM	–
PLATFORM CLIPS	–
DIPTUBE SUPPORT	–
JACKET SHELL	–
JACKET HEADS	–
JACKET NOZZLE NECKS	–
JACKET NOZZLE FLANGES	–

DESIGN DATA

	VESSEL
DESIGN AND FAB. CODE	API650
CERT. STAMP REQ'D.	NO
DESIGN PRESSURE	ATM
DESIGN TEMPERATURE	194° F
MIN. DESIGN METAL TEMP.	-20° F @ ATM
OPERATING PRESSURE	ATM
OPERATING TEMPERATURE	115° F
JOINT EFFICIENCY HEADS	0.70
JOINT EFFICIENCY SHELL	0.70
CORROSION ALLOWANCE	0"
SPECIFIC GRAVITY	1.0
EARTHQUAKE ZONE	Ss = (0.526) S1 = (0.23)
WIND LOAD	99 MPH
STRESS RELIEF	NOT REQ'D
RADIOGRAPHIC EXAM	SEE NOTE 7
DYE PENETRANT EXAM	NOT REQ'D
MAGNETIC PARTICLE EXAM	NOT REQ'D
HYDROSTATIC TEST	–
PNEUMATIC TEST	2 PSIG / GAUGE #1
JKT DESIGN AND FAB. CODE	–
JKT CERT. STAMP REQ'D.	–
JKT DESIGN PRESSURE	–
JKT DESIGN TEMPERATURE	–
JKT MIN. DESIGN METAL TEMP.	–
JKT OPERATING PRESSURE	–
JKT OPERATING TEMPERATURE	–
JKT JOINT EFFICIENCY HEADS	–
JKT JOINT EFFICIENCY SHELL	–
JKT HYDRO TEST	–

VESSEL FINISH

INTERIOR WELD TREATMENT:	SAV TANK STANDARD
EXTERIOR WELD TREATMENT:	SAV TANK STANDARD
SAV TANK FINISHING STANDARD:	SEE NOTE 6
INSULATION:	N/A
PAINTING:	N/A

VESSEL CAPACITY AND WEIGHTS

OPERATING CAPACITY	–
FULL CAPACITY	1,450 GAL.
EMPTY SHIPPING WEIGHT	1 3,600 LBS.
WEIGHT FULL OF WATER	1 16,000 LBS.
WEIGHT FULL OF PRODUCT	1 16,000 LBS.

QUALITY CONTROL

ENG. _____ DATE: _____

Q.C. _____ DATE: _____

This drawing is issued for customer approval. please review, make approval changes (if any) in red. check the appropriate box, sign & date.

- ☐ Approval – no changes. Please proceed with fabrication.
- ☐ Approved as noted. Please proceed with fabrication
- ☐ Not approved. Please make changes and resubmit.

Customer signature _____ Date _____

GENERAL NOTES

1.) COVER ALL FLANGES, OPENINGS & MACHINED SURFACES PRIOR TO SHIPMENT UNLESS OTHERWISE NOTED.
2.) BOLT HOLES TO STRADDLE 0° & 180° UNLESS OTHERWISE NOTED.
3.) NOZZLE REPADS TO HAVE (1) ø1/4" TELL-TALE HOLES ON HORIZONTAL CENTER LINE.
ALL OTHER REPADS TO HAVE (1) ø1/4" WEEP HOLE AT LOWEST POINT ON PAD.
4.) MANUFACTURING TOLERANCE TO BE IN ACCORDANCE WITH API STANDARD 650 7.5.
5.) ASME MATERIALS TO CONFORM TO THE FOLLOWING: FLANGES – B16.5, FITTINGS – B16.9 & COUPLINGS – B16.11.
6.) PICKLE ALL EXTERIOR WELDS. PASSIVATE INTERIOR & EXTERIOR OF VESSEL.
7.) X-RAY: SPOT X-RAY AS PER API 650 FOR M1 & M1 REPAD.

REV	D.BY	C.BY	DATE	DESCRIPTION
2				AS BUILT
1	RS	NP	4/16/25	CERTIFIED
0	RS	AD	3/5/25	APPROVAL

1 REVISIONS

Savannah Tank & Equipment Corp.
1517 Telfair Road, Savannah, GA 31415
(912) 233-8902

DRAWN BY: RS
CHK'D BY: AD
APPROVED BY: NP
SCALE: 1/2" = 1'-0"

KIMBERLY CLARK
REJECT FILTRATE TANK
EQUIP. # 370-TK-37005
CUST. PO #C000139275

DRAWING NO.: 017-25-1 SHT 1 OF 5 REV. SET 1

FC-14

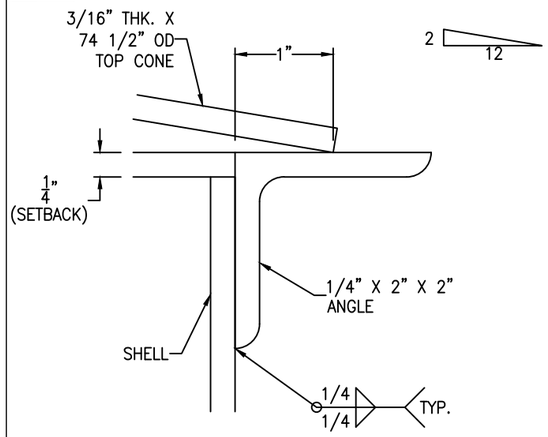

RIM ANGLE DETAIL

SCALE: 1'-0" = 1'-0"

FC-14

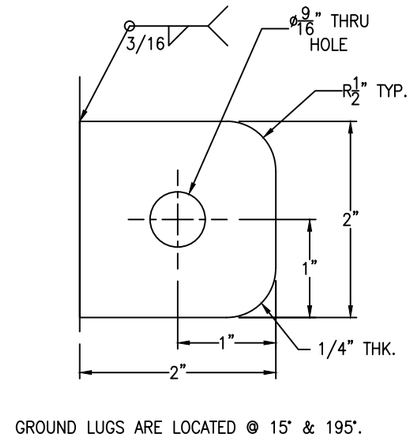

GROUND LUG DETAIL

(2 REQ'D) SCALE: 1'-0" = 1'-0"

FC-14

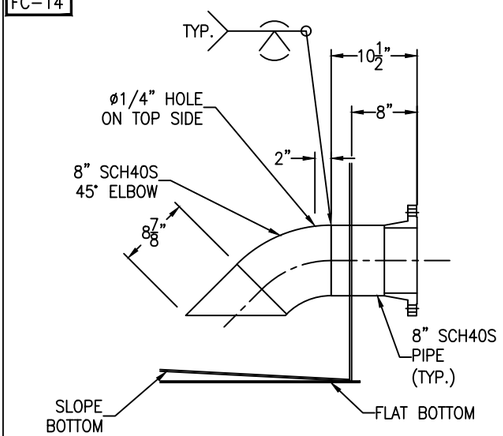

⚠1 NOZZLE D1 DETAIL

SCALE: 1" = 1'-0"

FC-14

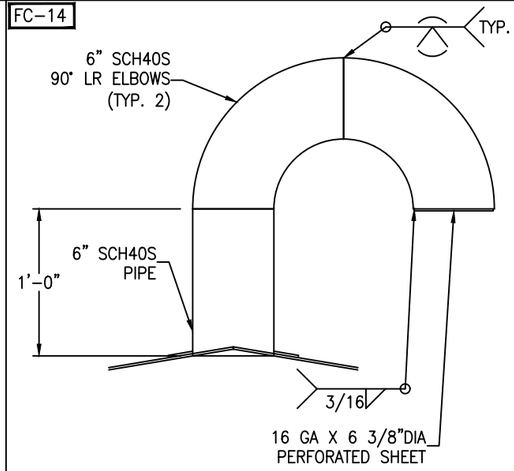

⚠1 NOZZLE V1 DETAIL

SCALE: 1 1/2" = 1'-0"

FC-14

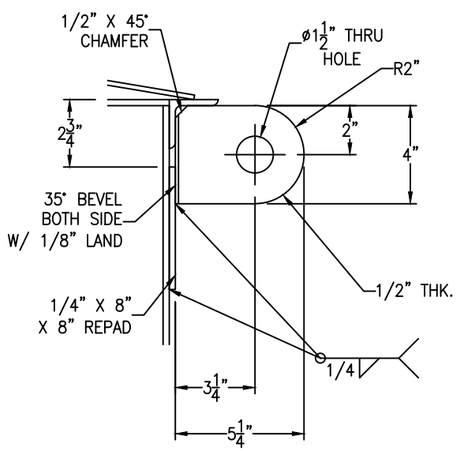

TANK WT. <= 5000#
SHACKLE PIN DIA. = 1 3/8"

LIFT LUG DETAIL

(2 REQ'D) SCALE: 3" = 1'-0"

FC-14

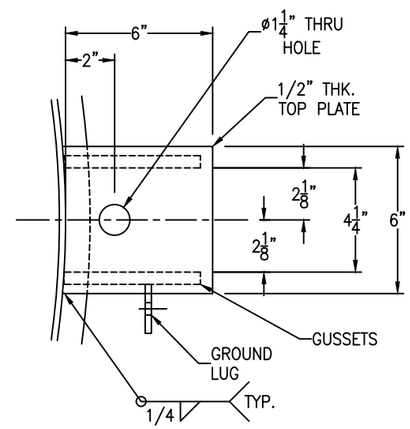

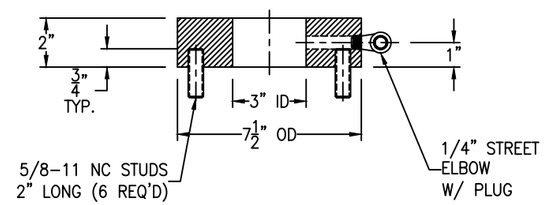

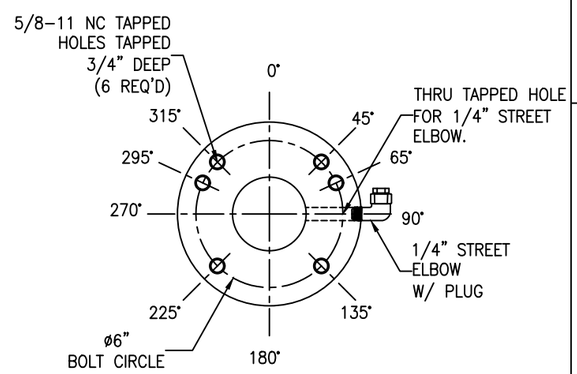

SPECIAL STUDPAD DETAIL

(1 REQ'D) SCALE: 3" = 1'-0"

FC-14

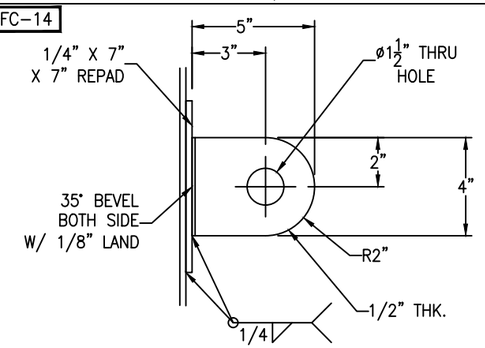

TANK WT. <= 5000#
SHACKLE PIN DIA. = 1 3/8"

TAILING LUG DETAIL

(1 REQ'D) SCALE: 3" = 1'-0"

FC-14

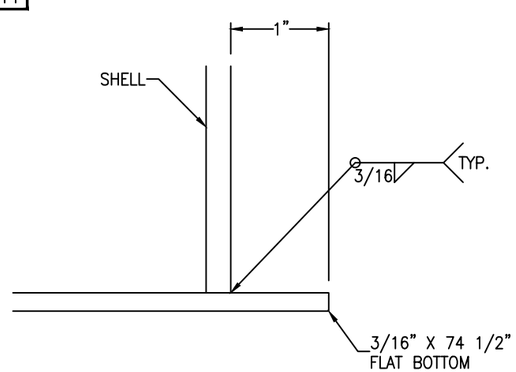

FLAT BOTTOM DETAIL

SCALE: 1'-0" = 1'-0"

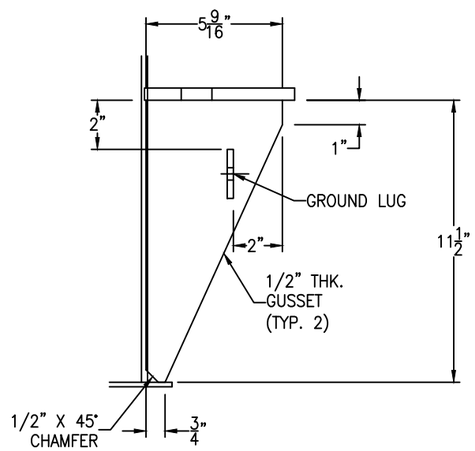

ANCHOR LUG DETAIL

(4 REQ'D) SCALE: 3" = 1'-0"

REV	D.BY	C.BY	DATE	DESCRIPTION
2				AS BUILT
1	RS	NP	4/16/25	CERTIFIED
0	RS	AD	3/5/25	APPROVAL

⚠1 REVISIONS

Savannah Tank & Equipment Corp.
1517 Telfair Road, Savannah, GA 31415
(912) 233-8902

DRAWN BY: RS
CHK'D BY: AD
APPROVED BY: NP
SCALE: 1/4" = 1'-0"

KIMBERLY CLARK
REJECT FILTRATE TANK
EQUIP. # 370-TK-37005
CUST. PO #C000139275

DRAWING NO.: 017-25-2 SHT 2 OF 5 REV. SET 1

FC-14

*NOTCH PIPE.

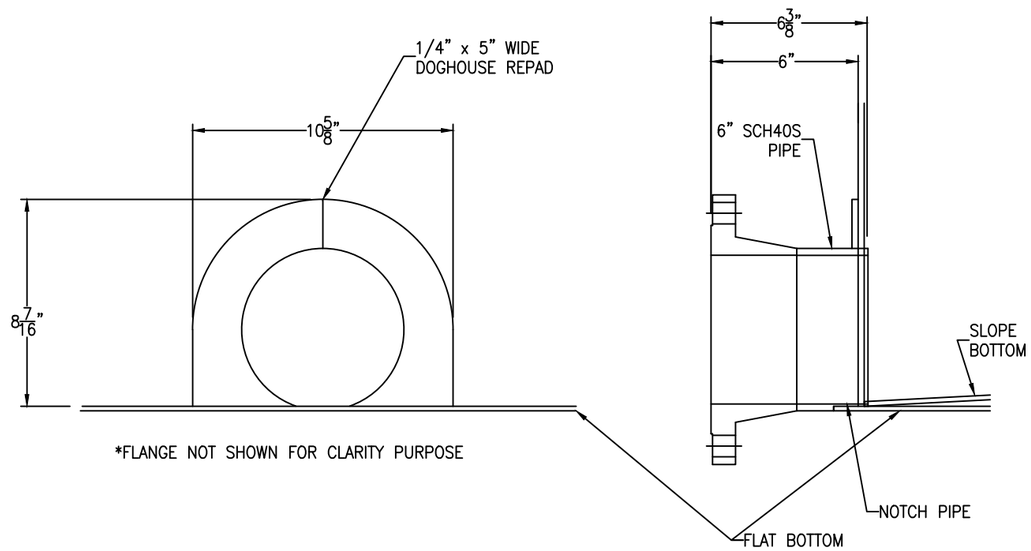

*FLANGE NOT SHOWN FOR CLARITY PURPOSE

NOZ. D2 DETAIL

SCALE: 3" = 1'-0"

REV	D.BY	C.BY	DATE	DESCRIPTION
2				AS BUILT
1	RS	NP	4/16/25	CERTIFIED
0	RS	AD	3/5/25	APPROVAL

⚠ REVISIONS

Savannah Tank & Equipment Corp.
1517 Telfair Road, Savannah, GA 31415
(912) 233-8902

DRAWN BY: RS
CHK'D BY: AD
APPROVED BY: NP
SCALE: 1/4" = 1'-0"

KIMBERLY CLARK
REJECT FILTRATE TANK
EQUIP. # 370-TK-37005
CUST. PO #C000139275

DRAWING NO.: 017-25-3 SHT 3 OF 5 REV. SET 1

FC-14

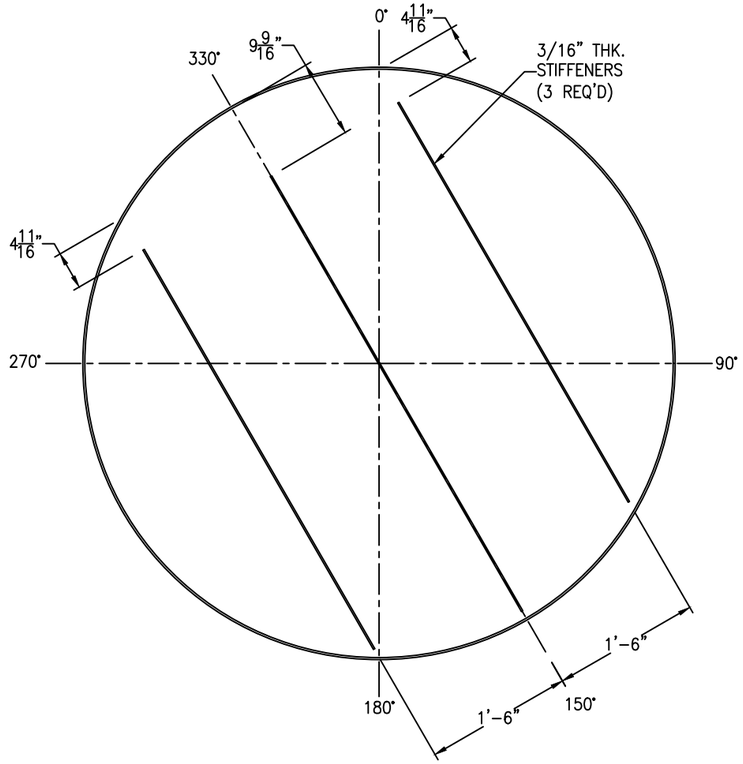

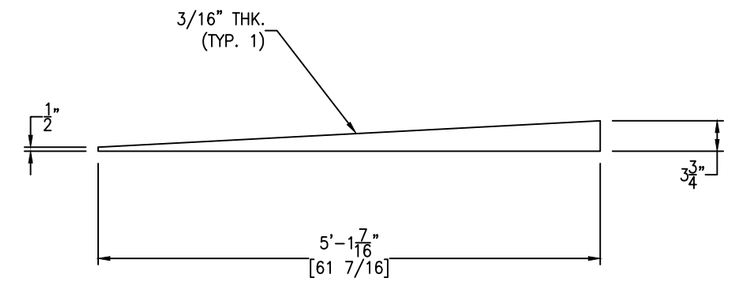

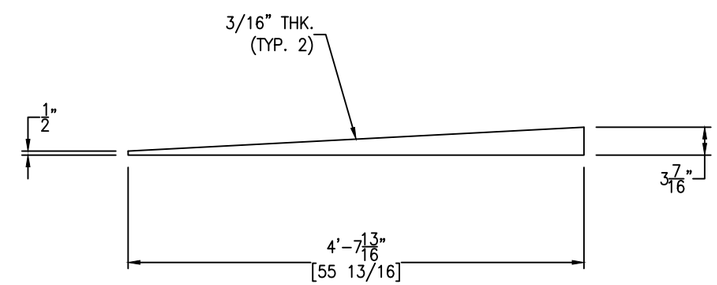

STIFFENERS DETAIL

SCALE: 1" = 1'-0"

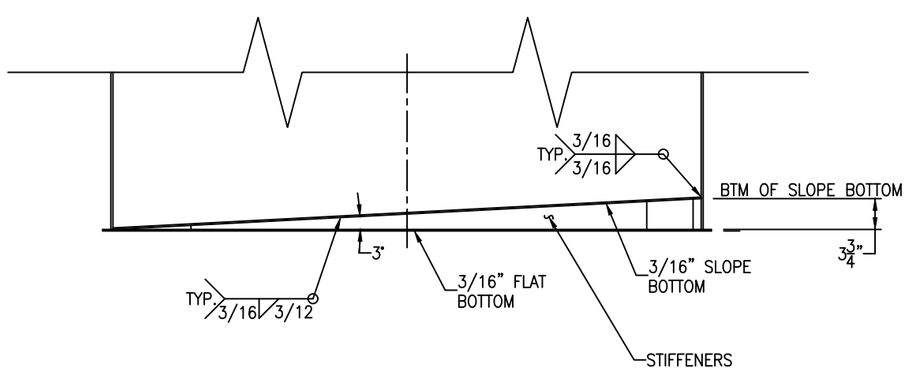

SLOPE BOTTOM DETAIL

SCALE: 1" = 1'-0"

REV	D.BY	C.BY	DATE	DESCRIPTION
2				AS BUILT
1	RS	NP	4/16/25	CERTIFIED
0	RS	AD	3/5/25	APPROVAL

⚠ REVISIONS

Savannah Tank & Equipment Corp.
1517 Telfair Road, Savannah, GA 31415
(912) 233-8902

DRAWN BY: RS
CHK'D BY: AD
APPROVED BY: NP
SCALE: 1/4" = 1'-0"

KIMBERLY CLARK
REJECT FILTRATE TANK
EQUIP. # 370-TK-37005
CUST. PO #C000139275

DRAWING NO.: 017-25-4 SHT 4 OF 5 REV. SET 1

FC-14

Bolting for blinds
X1: (8) 3/4-10 NC x 3 1/2" HH BOLT
(8) 3/4-10 NC HH NUT
(1) 8" 150# RING GASKET X 1/8" THK
(32) BELLEVILLE WASHERS (17-7 STAINLESS STEEL)

Bolting for hinge
(2) 1/2-13 NC x 1 1/2" HH BOLT
(2) 1/2-13 NC HH NUT

*NOTE: PLEASE CONFIRM THE ORIENTATION FOR HINGE. SEE SHEET #1 FOR ORIENTATION.

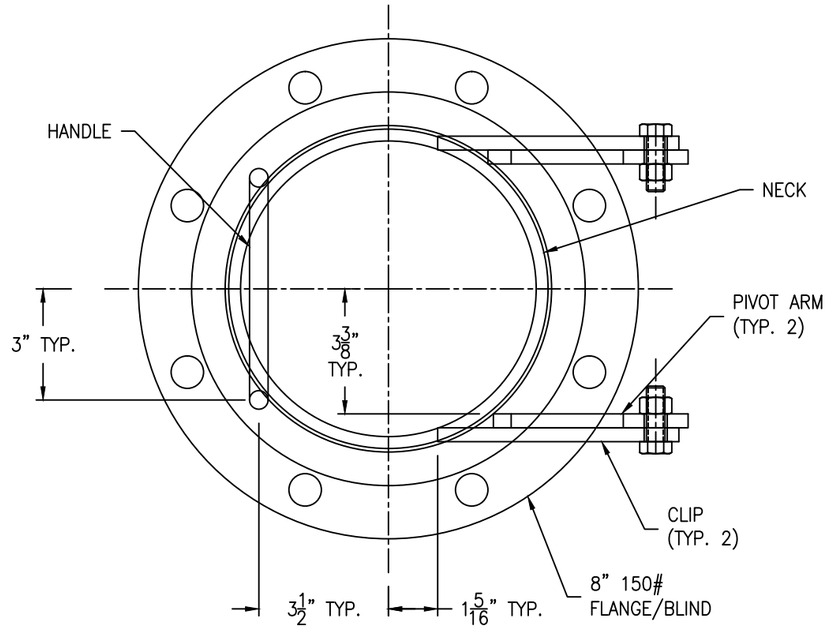

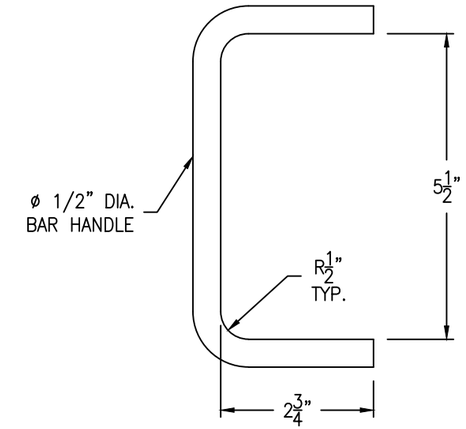

HANDLE DETAIL

(1 REQ'D) SCALE: 6" = 1'-0"

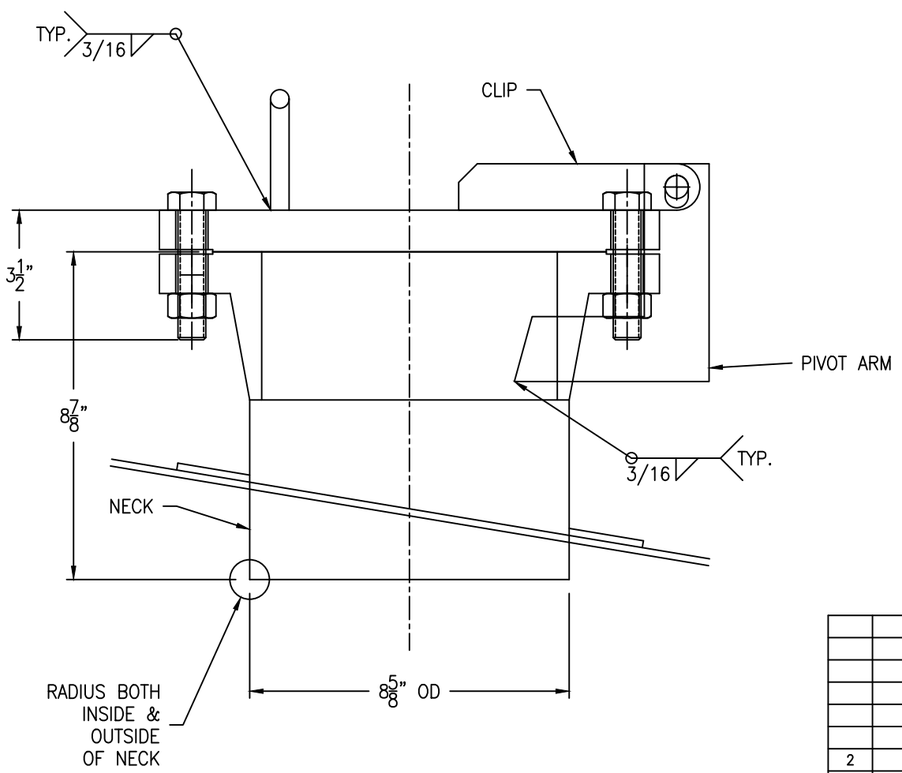

(1 REQ'D) SCALE: 4" = 1'-0"

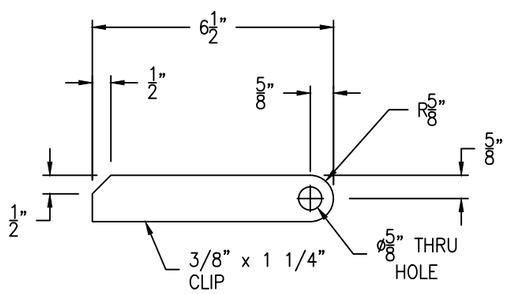

CLIP DETAIL

(2 REQ'D) SCALE: 4" = 1'-0"

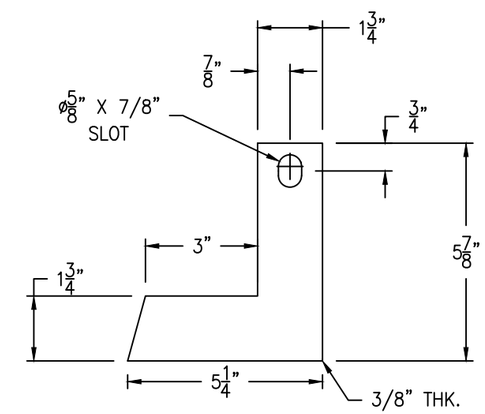

PIVOT ARM DETAIL

(2 REQ'D) SCALE: 4" = 1'-0"

REV	D.BY	C.BY	DATE	DESCRIPTION
2				AS BUILT
1	RS	NP	4/16/25	CERTIFIED
0	RS	AD	3/5/25	APPROVAL

REVISIONS

Savannah Tank & Equipment Corp.
1517 Telfair Road, Savannah, GA 31415
(912) 233-8902

DRAWN BY: RS
CHK'D BY: AD
APPROVED BY: NP
SCALE: 2" = 1'-0"

KIMBERLY CLARK
REJECT FILTRATE TANK
EQUIP. # 370-TK-37005
CUST. PO #C000139275

DRAWING NO.: 017-25-5 SHT 5 OF 5 REV. SET 1